Chapter 4 Installation

4.1 Installation considerations

Qualified service personnel should perform the installation of the RA83/84/85/93/94/95 series. The installation comprises the following operations.

(1) Unpacking each component of the system.
(2) Inspection of the exterior of each component unit and accessory.
(3) Checking the ship's mains voltage and current capacity.
(4) Determining the site of installation
(5) Installing the Antenna Unit.
(6) Installing the Processor Unit
(7) Installing the accessory items
(8) Planning the cable routing and connections
(9) Commissioning

4.2 Unpacking each component of the system

Unpack your package and check if all of the items stated in the packing list are contained in the package. If not, report this to the insurance agent for tracing missing goods or refund.

4.3 Inspection of each component unit and accessories

Carefully check the exterior of each component unit for dents, damage, etc. Also check the inside of component units for electrical and mechanical damage.

4.4 Setting the units

To achieve the best operational performance, the following factors must be considered.

4.4.1 Antenna Unit

(1) The radar antenna should be mounted on the centerline of your ship where no large obstacles interfere with the path of the radar beam.
(2) Location should be as high as possible, however, keep in mind that nearby objects may be overlooked if mounted too high. Also note that the higher the antenna, the higher the level of sea clutter.
(3) The mounting surface should be as flat as possible and approximately parallel with the vessel's water line.
(4) The antenna unit should be positioned forward of large structure and exhaust

stacks, to avoid causing blind sectors on the radar screen as well as contamination from engine exhaust on the radar antenna aperture.

(5) Provide sufficient servicing space.

4.4.2 Processor and Operation Unit

(1) Select a location that provides good observation to radar screen and outside environment.

(2) Locate the display so that it provides easy viewing from all likely operator's positions.

(3) Select a position safe and free of dampness, water spray, rain and direct sunlight.

(4) Provide enough space for servicing. Consider access to the rear panel for connecting various cables.

(5) Position the processor unit as far as possible away from other radio equipment.

(6) Keep a safe distance from the magnetic compass: standard: 0.60 m, steering: 0.40 m.

4.5 Cable routing and connections

4.5.1 Antenna

(1) The cable connecting the antenna and display should be run separately away from other cables such as, radio antenna feeders, power cables, etc. Under no circumstances should it be in parallel arrangement with other cables. These precautions are essential to avoid radio interference to/from other equipment installed on the ship. If this is not possible, either cable set should be screened with metal conduit or another form of shielding.

(2) Cable should be run as short as possible but be kept within the standard length to achieve best radar performance.

(3) The copper braids of the cable must be grounded via a grounding stud in the transceiver unit.

4.5.2 Processor Unit

(1) The Processor Unit must be grounded to the hull via a grounding stud at the rear of the processor unit.

4.6 Installation procedure

Observe the following procedure for installing the Antenna unit and Processor unit.

4.6.1 Installing the Transceiver Unit

When mounting the unit, position the transceiver unit as shown, so that a notched part of the transceiver base is directed towards the aft. This arrangement simplifies cable fitting and servicing. Also take note of the precautions detailed in paragraph 4.4.1 when you attempt to install the antenna unit.

(1) Drill four fixing holes of 14 mm diameter on the fitting surface of a radar platform, as shown in Figure 4.1.

(2) Fit the transceiver unit on the position and fix it using the 12 mm stainless bolts prepared as installation materials.

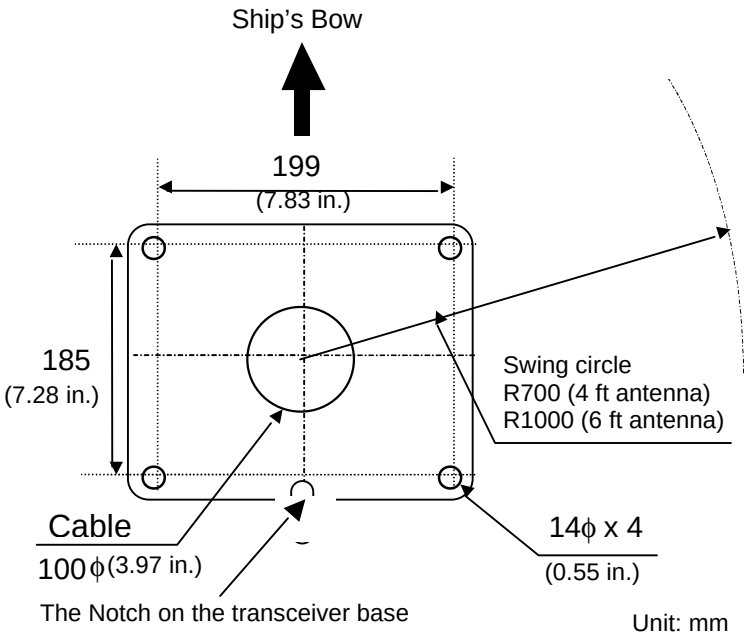

Figure 4.1 Plan view of fixing holes

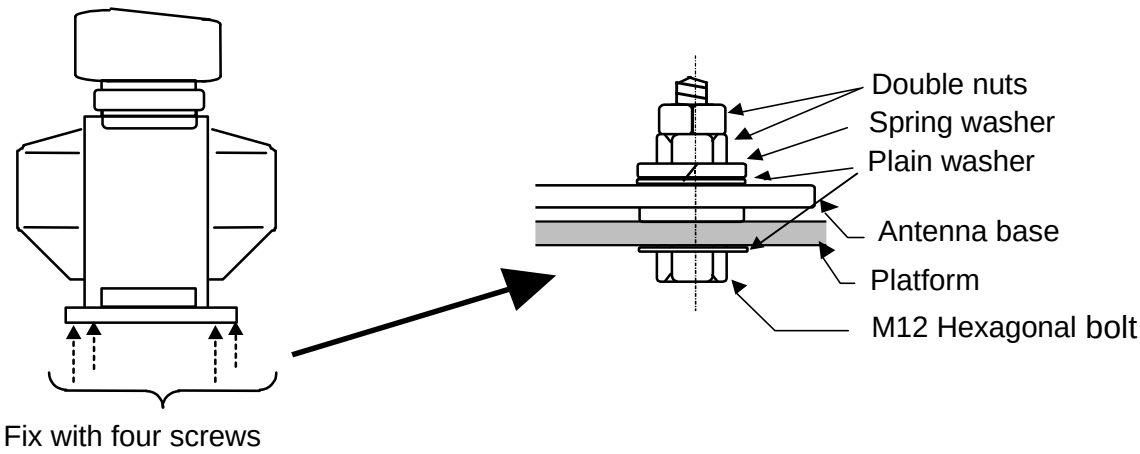

Figure 4.2 Details of the base fixing

4.6.2 Fitting the Aerial

(1) Remove the protection cap on the outlet of the rotating base.

(2) Fit the aerial on to the rotating base. Orient the aerial front face (the company logo printed on it) to the direction to which two arrow-marks on the rotating base point.

(3) Fix the aerial with four bolts attached to the aerial base.

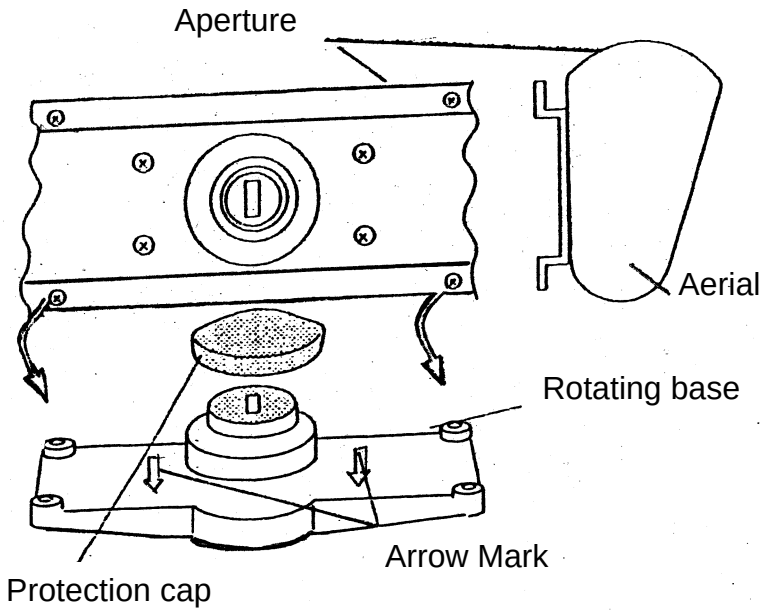

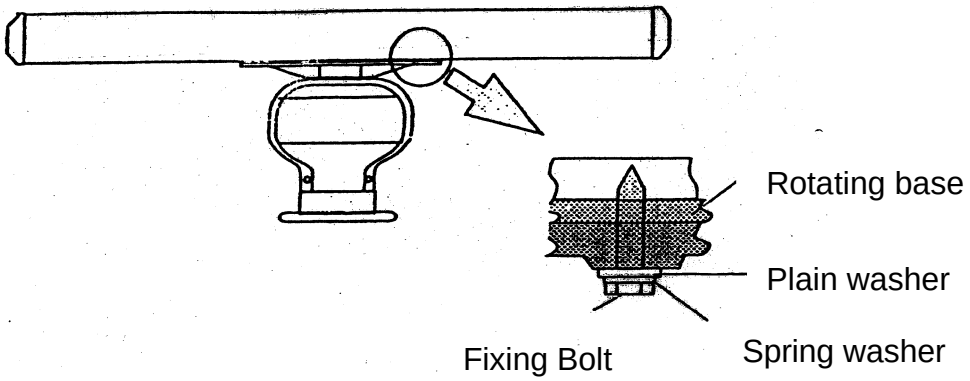

Figure 4.3 Fitting the aerial onto the rotating base

4.6.3 Connecting the cable

(1) Remove the front and rear covers by loosening fixing bolts (4 bolts each).
(2) Remove the TR (transceiver) unit by removing two fixing bolts. Make sure the magnetron fitted on the transceiver does not attract any magnetizing material.
(3) Remove the rubber sealing, washer, and retainer plate from the antenna cable.
(4) Feed the cable through the access hole through to the inside of the antenna unit.
(5) Slide the rubber sealing, washer and retainer plate onto the cable.
(6) Fix the cable retainer plate over the dressed braid using three fixing bolts.
(7) Fix the antenna cable with the cable clamp.
(8) Connect the antenna cable to the Modulator PCB. (Refer to the interconnection diagram for detail)

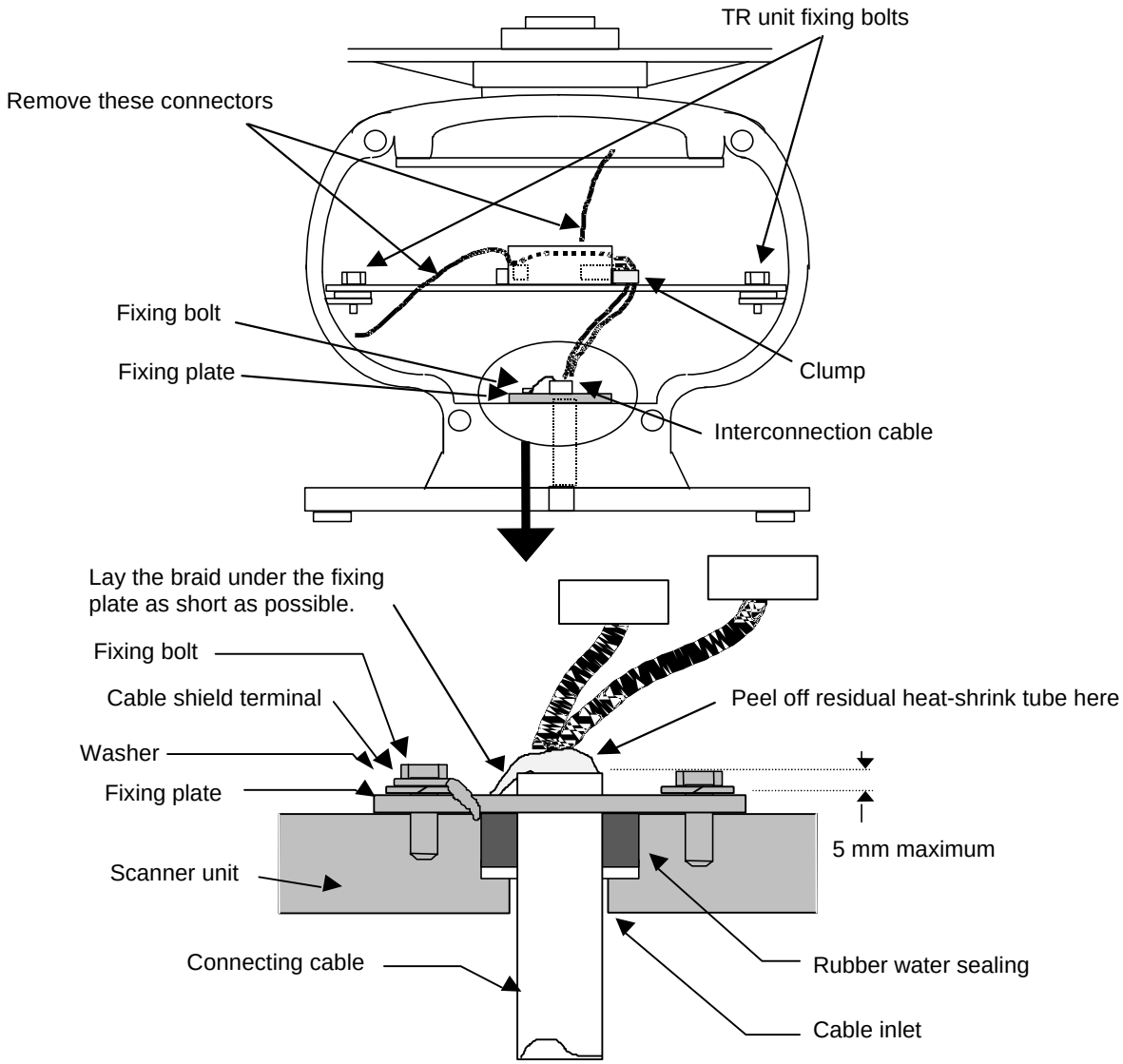

Figure 4.4 Connecting the cable to the antenna

ANTENNA UNIT

P1

Description	Color	No.
+250V	Violet	1
NC	NA	2
GND	Yellow	3
+40V	Red(Larger)	4
+40V	Yellow (Larger)	5
+40V-RTN	Green (Larger)	6
+40V-RTN	Blue (Larger)	7

P2

Description	Color	No.
+24V	Blue	1
NC	NA	2
+12V	Orange (Larger)	3
DATA-RTN	Braid	4
DATA	Red (Sheild)	5
BP/SHF-R	Braid	6
BP/SHF	Brown (Sheild)	7
V/TRIG-RTN	Braid	8
V/TRIG	Gray (Coaxial)	9

Grounding Lug

GND	Braid	1

PROCESSOR UNIT

PX

No.	Color	Description
1	Violet	+250V
2	Blue	+24V
3	Orange(Larger)	+12V
4	Yellow	GND
5	Braid	DATA-RTN
6	Red (Sheild)	DATA
7	-	-
8	Brown (Sheild)	BP/SHF
9	Braid	BP/SHF-RTN
10	Gray (Coaxial)	V/TRIG
11	-	
12	Red(Larger)	+40V
13	Yellow(Larger)	+40V
14	Braid	V/TRIG-RTN
15	Green(Larger)	+40V-RTN
16	Blue(Larger)	+40V-RTN

Figure 4.5 Interconnections between Antenna Unit and Processor Unit

4.6.4 Installing the Processor and Operation unit

The Processor Unit can be installed on tabletop or bulkhead. Use the following procedure for installation.

The Operation Unit can be installed in table mount or flush mount mode.

4.6.4.1 Table mounting:

Processor unit

(1) Determine the location observing the precaution given in Para 4.4.2.

(2) Place the Processor Unit onto the position where the unit is installed and fix it using the truss tapping screws prepared in the installation material kit. (4 positions)

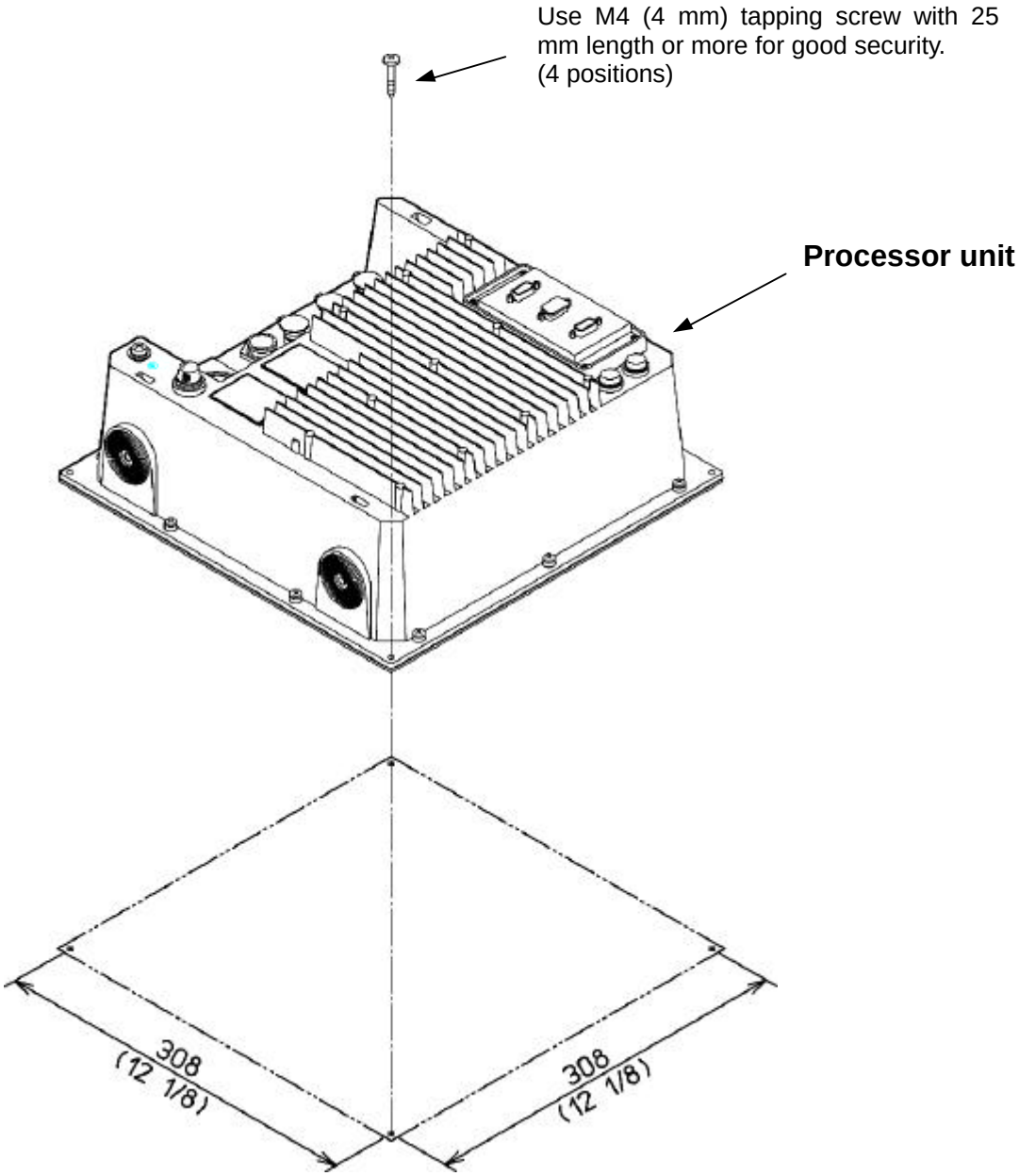

Figure 4.6 Installing the Processor Unit

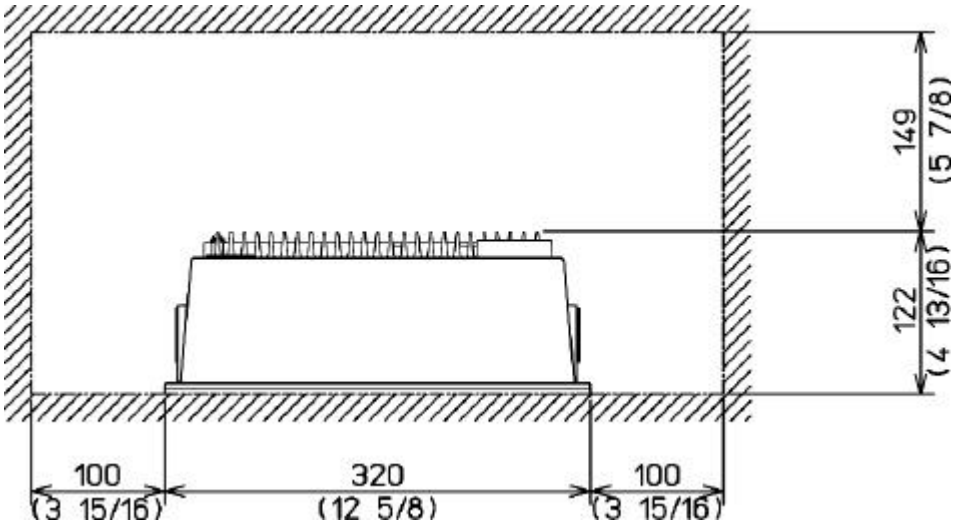

Figure 4.7 Service space required for the Processor Unit

Operation unit

(1) Remove the screw cover (4 positions) at the corner of the operation unit. To do so, insert a thin, flat screwdriver into a gap between the cover and the operation unit. Apply gentle pressure to gradually pry the cover off the unit.

(2) Remove the mounting bracket from the operation unit by loosening the M5 screw (4 positions).

(3) Determine the place to install the bracket and mark the point of screw. (4 positions)

(4) Put the bracket in place and fix with 5M (5 mm) tapping screw. (4 positions)

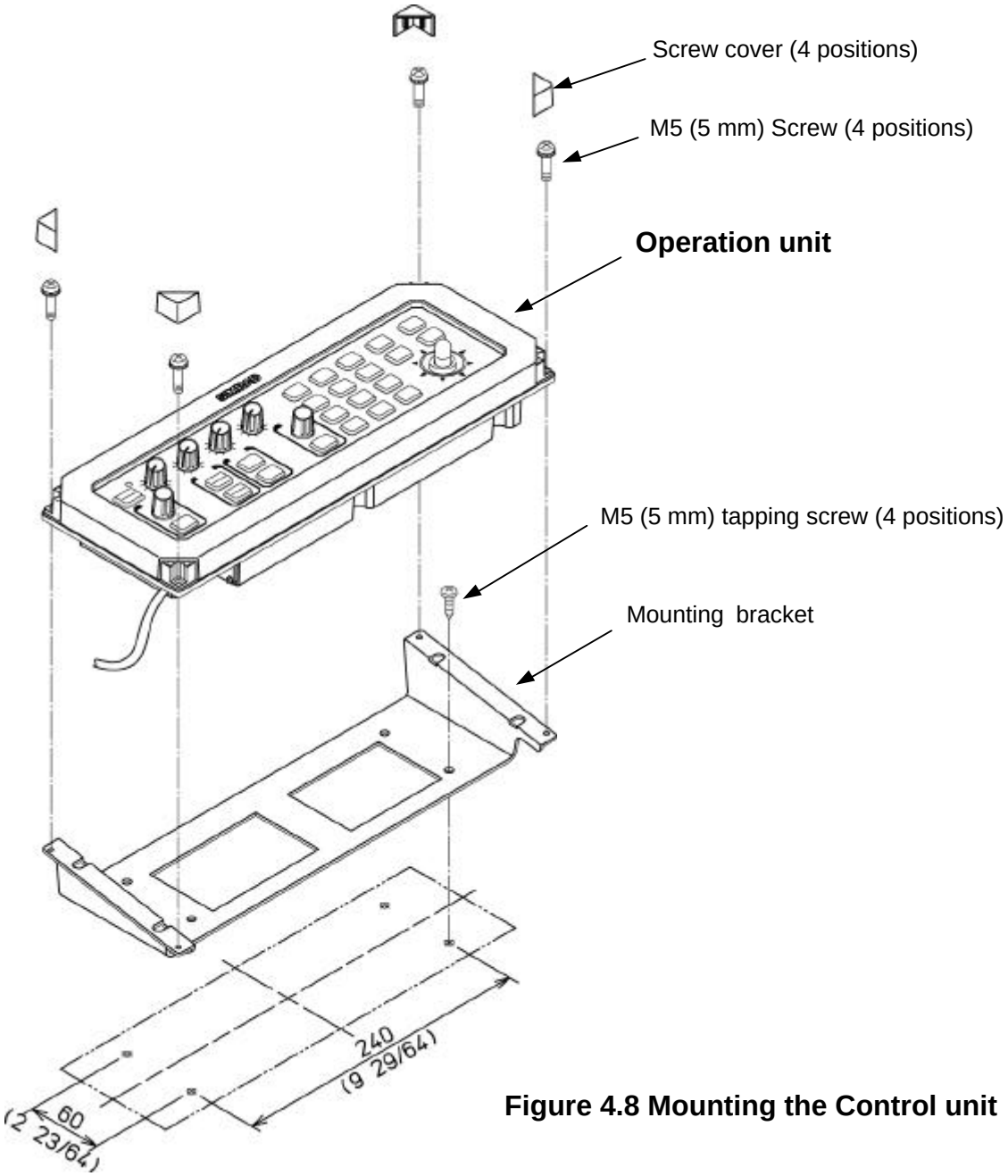

Figure 4.8 Mounting the Control unit

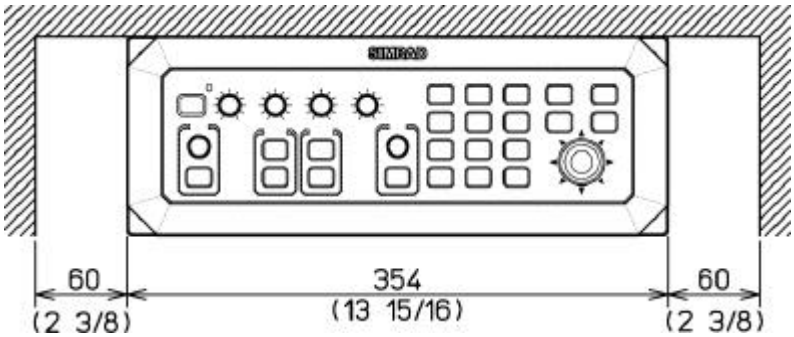

Figure 4.9 Service space required for the Operation unit

4.6.4.2 Flush mounting

<u>Operation Unit</u>

Preparation:

(1) Cut aperture in surface to the dimensions shown below

(2) Mark screwing points with a sharp-edged tool.

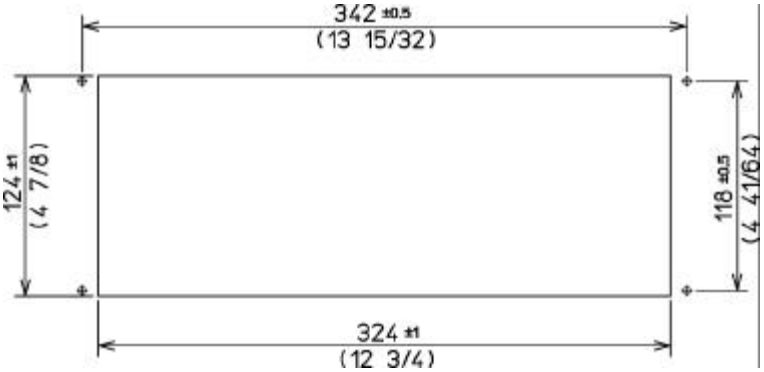

Figure 4.10 Dimensions of the Operation unit mounting aperture

Installation:

(1) Remove the mounting bracket from the Operation unit.

(2) Remove a screw cover, which is fitted on each corner of the Operation unit front face. (Refer to Figure 4.13)

(3) Put the Operation unit and connecting cable into the aperture flush with the panel surface. Connect the cable to the Processor unit at the specified receptacle. (Refer to Figure 4.14)

(4) Fasten the Operation unit to the panel using a 4 mm tapping-screw. (4 positions) In case you use M4 screws select an appropriate length that best suits fixing the unit to the panel.

(5) Refit the screw covers removed in step (2).

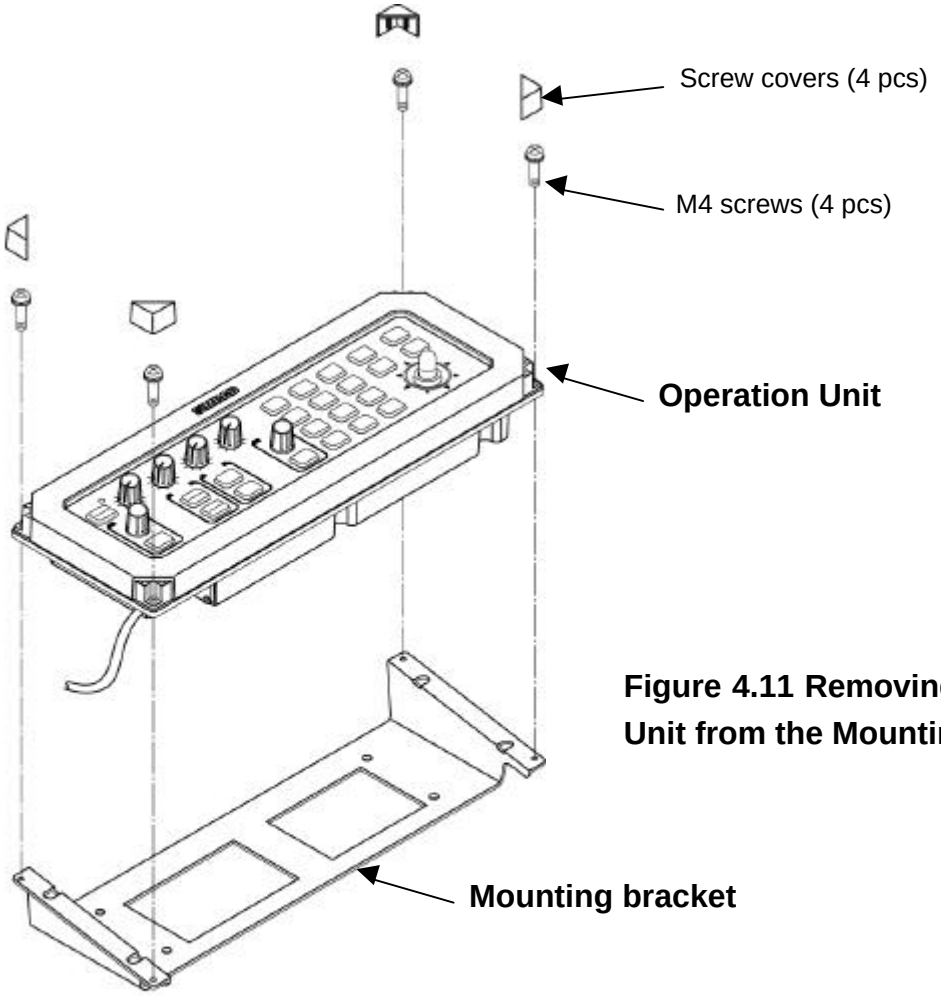

Figure 4.11 Removing the Operation Unit from the Mounting Bracket

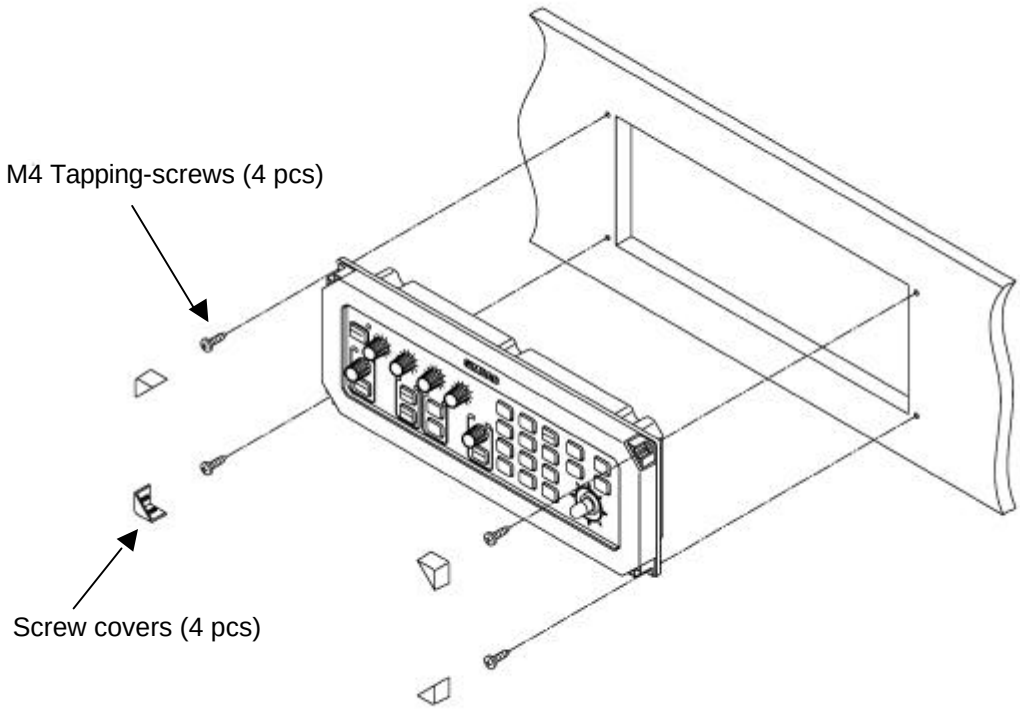

Figure 4.12 Installing the Operation Unit onto the panel

4.6.5 Connecting the cable to the Processor Unit

Connect the antenna cable, power cable and the data cable to the designated sockets as shown in Figure 4.13.

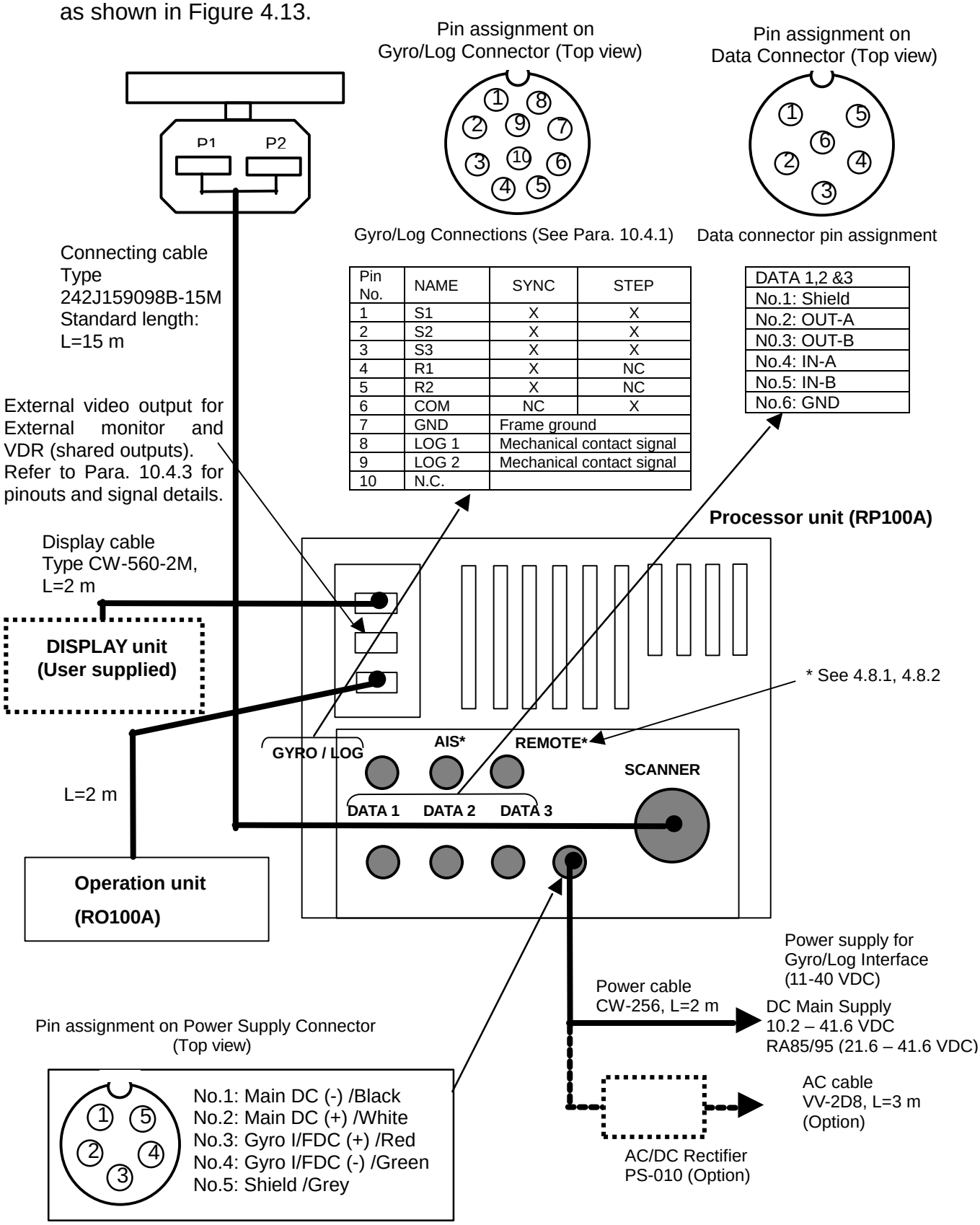

Pin No.	NAME	SYNC	STEP
1	S1	X	X
2	S2	X	X
3	S3	X	X
4	R1	X	NC
5	R2	X	NC
6	COM	NC	X
7	GND	Frame ground	
8	LOG 1	Mechanical contact signal	
9	LOG 2	Mechanical contact signal	
10	N.C.		

DATA 1,2 &3
No.1: Shield
No.2: OUT-A
N0.3: OUT-B
No.4: IN-A
No.5: IN-B
No.6: GND

Figure 4.13 Cable connections to the Processor Unit

4.6.6 Link setting for the gyrocompass

When the Gyro signal voltage is lower than 50V, change the link positions for J721 to J725 from “2-3” to “1-2” on the Main Logic PCB (E47-700*) as shown below.

Change setting from “2-3” to “1-2”, applicable for J721 to J725

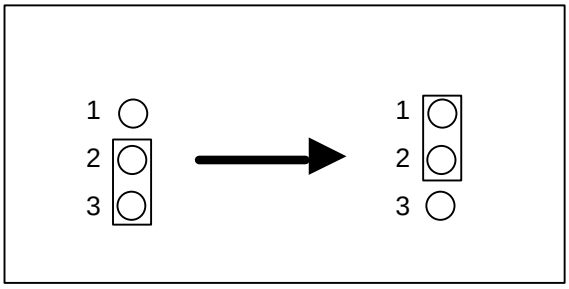

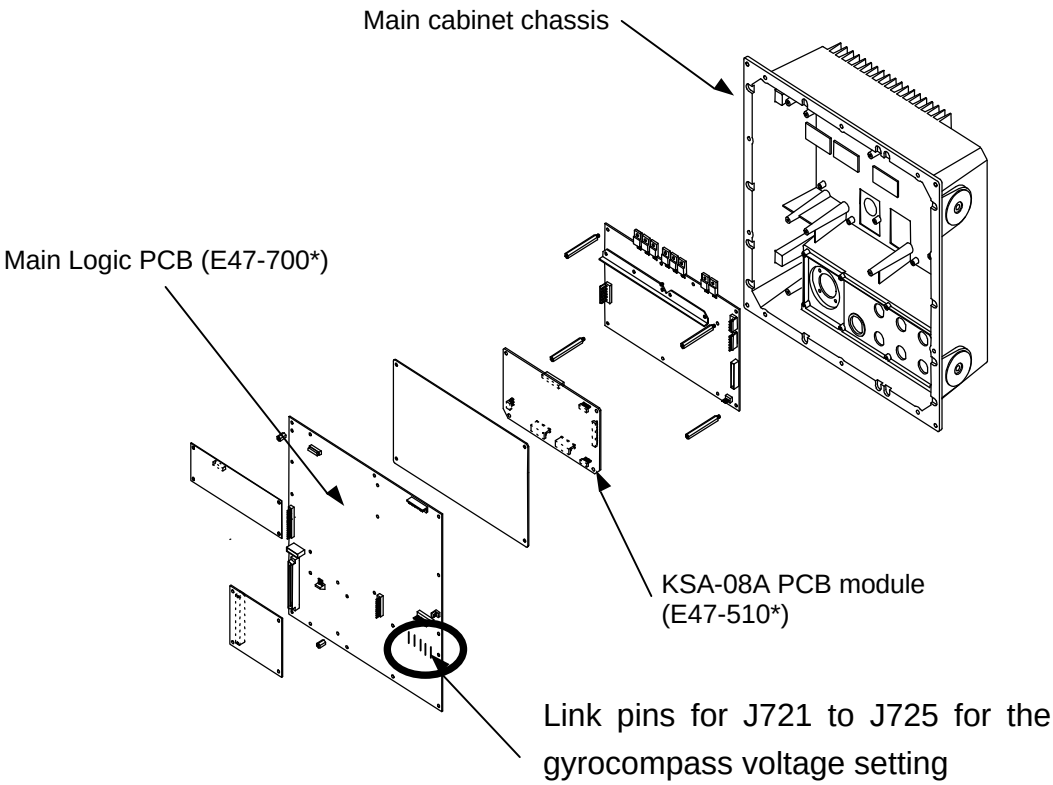

Figure 4.14 Locations of the gyrocompass links on the Main Logic PCB

4.6.7 Ferrite core assembling for Power cable

Loop the power cable around the ferrite core three turns at position of 40 cm from the connector as shown in figure 4.15.

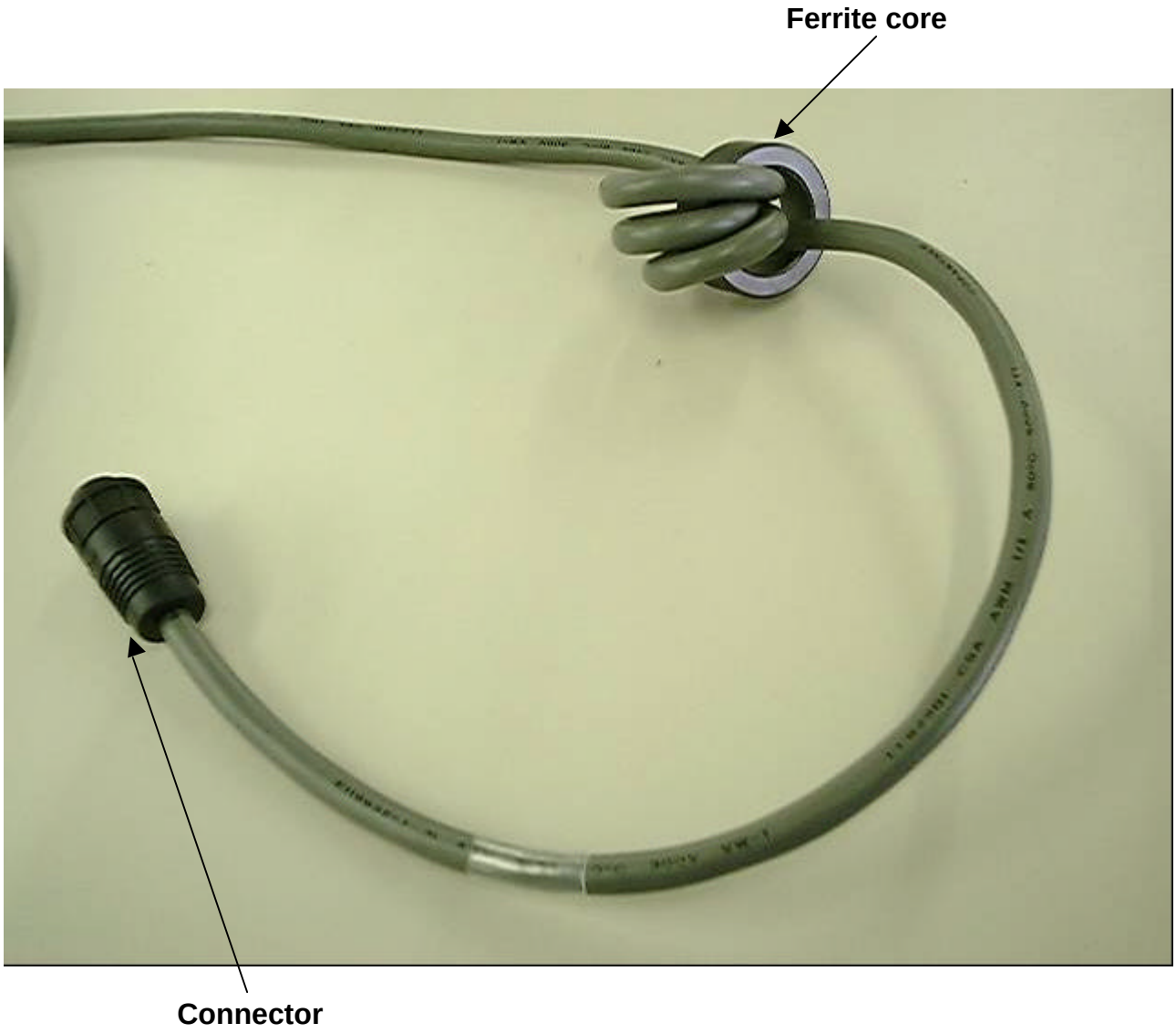

Figure 4.15 Ferrite core assembling for Power cable

4.7 Setting up after installation

A few set ups are required after installation. Before carrying out the setting up procedures, check the following items in order to make sure the equipment operates in normal manner:

(1) Check that the ship's power supply is properly rated to operate the radar system.

(2) No person is present near the platform or on the mast where the radar antenna is to be operated. Put a warning tag on the display unit that reads, "**RADAR ADJUSTMENT IN PROCESS. DO NOT TOUCH ANY CONTROLS**".

NOTE: The following setup menus are protected from ordinary key operations. To use this function, first turn off the radar set. Second, press and hold the MODE key and turn the radar on. When the standby condition is established, turn the radar on to enter the following menu functions.

4.7.1 Transmission timing

SYSTEM MENU: SYSTEM SETUP/DELAY

Adjusts the transmission delay time in order to match the timing of radar transmission and the start of the radar sweep. In practice, refer to the following figures that illustrate the result of the setting, whether it is properly adjusted or not. To effectively perform this setting, find an appropriate nearby object that is straight across from your radar. Carry out the following procedure to set up the proper transmission delay time.

(1) Highlight the DELAY item and press the ENT key to set up the selection-ready status.

(2) Press the Joystick towards the up or down until a straight video line is shown on the screen.

(3) Press the ENT key to fix the settings.

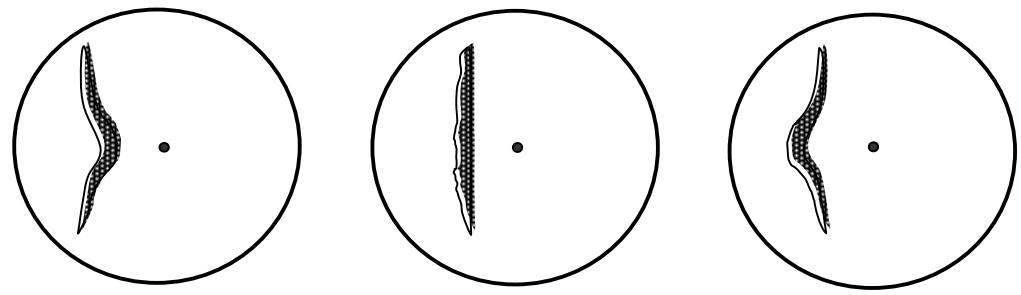

Delay time too short | Delay time appropriate | Delay time too much

Figure 4.16 Echo presentation depending on the transmission delay timing

4.7.2 Ship's heading set up

SYSTEM MENU: SYSTEM SETUP/HDG

Adjusts the bearing of the radar picture shown on the screen. First, take an optical bearing of a stationary target located within a viewable range using a standard magnetic compass on the ship. Then measure the target bearing on the radar. If the deviation is found more than +/- 1 degree on the screen, carry out the following procedure for correction.

(1) Move the Joystick up or down to highlight the HDG sign and press the ENT key.
(2) Press the Joystick up or down to change the bearing, in order to set the radar echo bearing to coincide with the compass bearing.
(4) Press the ENT key to fix the bearing.

4.7.3 Resetting Manual GAIN/STC (Height)/Manual STC

Gain and Sea settings have been properly set at the factory, however, when a need is arisen to change these settings use the following procedures. Resetting must be carried out in the following order.

1. Manual GAIN setting
2. STC (Height) setting
3. Manual STC setting

When completed, be sure to record respective setting values in the GAIN/SEA/HEIGHT sheet prepared in this paragraph.

4.7.3.1 Manual GAIN setting

(1) Press and hold the MODE key and turn the power on. When a beep is heard, release the key.
(2) Transmit the radar when STBY is displayed on the screen.
(3) Set the RAIN and SEA control to 0, GAIN to 8 and BRILL to 10 (Max), respectively.
(4) Confirm the following settings. If not set so.
IR level: IR2
SEA, GAIN, RAIN: MANUAL
(5) Set the range scale to maximum. (RA83/93: 64 NM, RA84/94: 72 NM, RA85/95: 96 NM)
(5) Select the GAIN MANUAL menu per ADJUST>PRESET>GAIN MANUAL and display the GAIN MANUAL index entry window.
(6) Move the Joystick up or down until a desired noise level (density of the noise speckle) is obtained and press the ENT key to fix the setting.
(7) Record the new GAIN setting value in the GAIN/SEA/HEIGHT Setting Record

sheet (GAIN/SEA/HEIGHT sheet, hereafter).

(8) Repeat the above procedure for all range scales, if required.

4.7.3.2 STC (Height) setting

The STC characteristic is more less subject to vary depending on the height of the antenna from the sea surface. Resetting the STC may be needed according to the circumstances of the respective vessels. To achieve the best result, this setting should be carried out off shore. Use the following procedure to do.

(1) Set SEA, GAIN and RAIN control to manual mode.

(2) Set GAIN to 8, SEA to 0 and RAIN to 0, respectively. Make sure that the sea clutter speckle is appropriately shown on the screen. If the speckle is too much or too short on the display, adjust the GAIN control as appropriate.

(3) Select an appropriate range scale to permit the clutter speckle is shown within the screen.

(4) Adjust the SEA control to reduce the sea clutter until some residual clutter speckle is shown.

(5) Turn the SEA control either clockwise or counterclockwise to see the effect of the STC. If the effect is uniform in both long and short ranges, the STC Height selection is considered appropriate. In such a case when the short range sea return is suppressed earlier that that of the long range or vice versa, use the following procedure to correct.

(6) Go SYSTEM>SYSTEM SETUP>HEIGHT and display the HEIGHT index entry window.

(7) Adjust the SEA control to see the tendency of the control. If the short-range clutter return is suppressed in advance to the long range one, reduce the HEIGHT value by pressing the Joystick downwards, and vice versa.

(8) Adjust the SEA control to confirm the effect. If the result is not satisfactory, repeat the above procedure.

(9) Press the ENT key to fix the setting.

(10) The HEIGHT index is irrelevant to the range. If this setting cannot be performed offshore, the HEIGHT index should be selected with reference to the actual antenna height from the sea surface. Use the following criteria as reference.

Antenna height	Recommended HEIGHT index
3 m	8
5 m	5
10 m	2

4.7.3.3 Manual STC setting

This setting allows the maximum STC range to be effective up to 6 NM. Use the following procedure to set up.

(1) Set radar controls as follows:
Range scale: 12 NM, RAIN/SEA: 0, GAIN: 8, BRILL: 10 (Max)

(2) Activate VRM 1 per: DISP>MARK>VRM 1>ON and press the ENT key.

(3) Set VRM 1 to 6.0 NM.

(4) Turn off IR 2 per: DISP>ECHO>IR>OFF and press the ENT key.

(5) Set SEA, GAIN and RAIN to MANUAL mode.

(6) Set SEA to 10 notch (Maximum).

(7) Go ADJUST>PRESET>SEA MANUAL and display the numeral entry window.

(8) Press the Joystick up or down to allow the background noise speckle is reduced to about 6 NM. Press the ENT key to fix the setting. Record the value.

(9) Repeat the above procedure to the rest of the range scales using the same value.

(10) Change range scale from one to the other with the SEA control set to maximum. If the STC effect is not uniform on some ranges, reset the setting repeating the above procedure.

(11) Reset IR2 to be activated.

GAIN/SEA/HEIGHT Setting Record sheet

Range scale	Pulse length	GAIN setting		SEA	
		Initial	New	Initial	New
96NM(72or64NM)	LP				
48NM	LP				
24NM	LP				
12NM	LP				
12NM	M2				
6NM	M2				
6NM	M1				
3NM	M2				
3NM	M1				
1.5NM	M1				
1.5NM	SP				
0.75NM	M1				
0.75NM	SP				
0.5NM	SP				
0.25NM	SP				
0.125NM	SP				

STC HEIGHT: Initial setting: _____ New setting: _____

4.8 Setting up Option

4.8.1 AIS Interface (Option)

DISP MENU: NAV/AIS

Activate AIS function from DISP/NAV/AIS menu.

Automatic Identification System (AIS) will automatically display ships symbol and data around your ship. The range of the data display ships can be set from RADAR/AIS menu.

Pin assignment on
Data Connector (Top view)

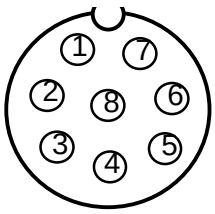

Pin No.	NAME
1	Shield
2	IN-B
3	IN-A
4	OUT-B
5	OUT-A
6	GND
7	AIS ALARM+
8	AIS ALARM-

4.8.2 Remote Display operation

A Processor Unit type RP100A can be used as a remote display. To use the display in this configuration, use the following procedure.

4.8.2.1 Connecting the Remote Display

Connect the Master display (RP100A) and a Remote display (RP100A) with the connecting cable CW-561 (10m) as shown in Figure 4.16.

4.8.2.2 Required set up

In the Slave display, set the status switch S1-6 on the Logic PCB (E47-700*) to ON.

> ⚠ **CAUTION:**
> Do not connect the Antenna unit to the remote display. If do so, the remote display may malfunction.

4.8.2.3 Possible operation on Remote Display

The remote display is configured to be slave to the master display in terms of transmission control, transmit and standby. Except this function, the remote display has all controls that the master does, such as, gain, STC, FTC, range scale change, off-centering, changing mode of operation, VRM, EBL, fixed rings, etc.

In the following circumstances, the display presentation becomes abnormal but is not fault.

(1) When the transmission is turned off, the slave screen is displayed with plural coaxial video caused by non-updated video data.

(2) When the master display is set to short range and the remote display to long range, the remote screen will be shown with coaxial radar picture caused by higher transmission rate video being supplied from the master display.

(1) On the contrary, when the master display is set to long range and remote display to short range, the remote display screen will be shown with stretched video towards range. In a particular case, the radar video display will be shown halfway due to slower transmission rate.

NOTE: *To utilize the nav data, true bearing mode, true motion mode and EPA/ATA functions in remote display, relevant sensor units such as, gyro compass, speed log and GPS receiver must be connected.*

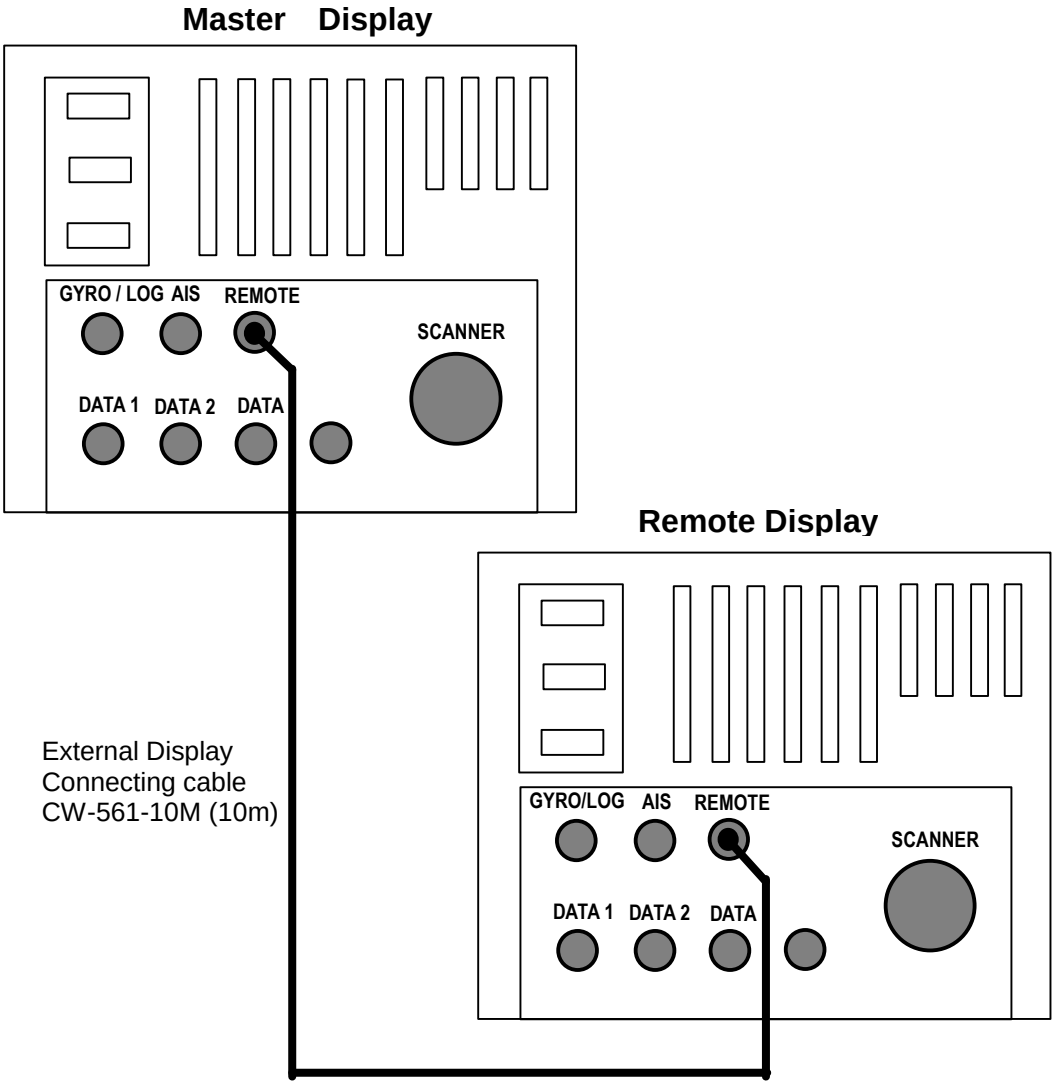

Figure 4.17 Remote display connection

Pin assignment on
REMOTE Connector
(Top view)

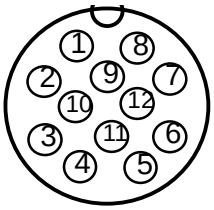

Pin No.	NAME
1	VIDEO OUT
2	TRIG OUT
3	GND
4	AZIP OUT
5	SHF OUT
6	GND
7	VIDEO IN
8	TRIG IN
9	GND
10	AZIP IN
11	SHF IN
12	+12Vdc(Not used)

APPENDIX 1

Installation of the ATA module, MRE-300

The ATA module MRE-300 is installed inside the processor unit. Use following the instructions for installation.

(1) Locate the position of the four fixing studs on the Main Logic PCB (E47-700*) prepared for the ATA module. (Refer to the figure below)

(2) Put the ATA module (MRE-300) on the studs and press the module gently downwards in order that the connector installed on the module properly plugs into the receptacle J705 on the Main Logic PCB.

(3) Fix the module using the four 3 mm fixing screws, prepared in the ATA module kit.

Installation of the AIS module, AIS-100

The AIS module (AIS-100) is installed inside the processor unit. Use the following instructions for installation.

(1) Locate the position of the four fixing studs on the Main Logic PCB (E47-700*) prepared for the AIS module. (Refer to the figure below)

(2) Put the AIS module (AIS-100) on the studs and press the module gently downwards in order that the connector installed on the module properly plugs into the receptacle J716 on the Main Logic PCB.

(3) Fix the module using the four 3 mm fixing screws, prepared in the AIS-100 kit.

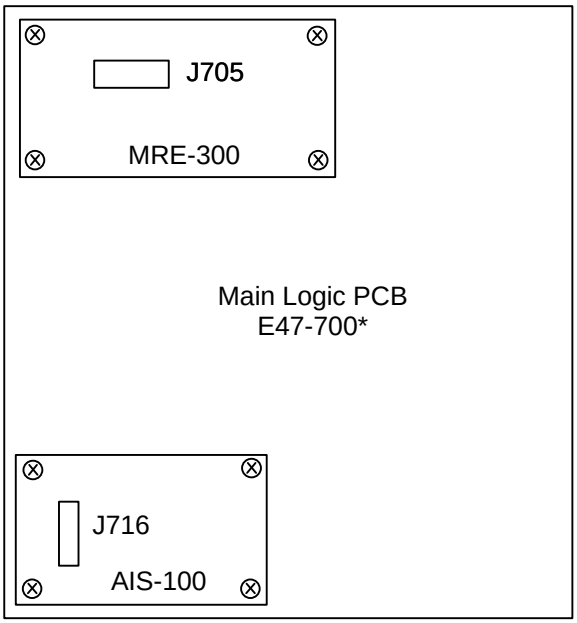

Figure A.1 Position of the ATA and AIS modules to be installed

AIS connector pinouts and cable color coding designation:

Cable type name	Port name	Pin number	Signal name	Color code
CW-387-5M	AIS	1	Shield	Braid
		2	IN-B	Red dot/Orange
		3	IN-A	Black dot/Orange
		4	OUT-B	Red dot/White
		5	OUT-A	Black dot/White
		6	GND	Black dot/Grey
		7	AIS ALARM+	Red dot/Pink
		8	AIS ALARM-	Black dot/Pink

About AIS malfunction alarm

If the AIS transponder gets failed in operation, the AIS ABNORMAL status is supplied from the transponder to the display causing the error message to appear on the screen.

NOTE: *In case no alarm signal lines are available in the AIS transponder, link the AIS ALARM+ (Red dot/Pink wire) and AIS ALARM- (Black dot/Pink) signal lines at the cable end at the transponder side. This processing is necessary to prevent the AIS alarm message from being shown mistakenly on the display.*

Installation of the Gyro Interface module, KSA-08A

The Gyro Interface module (KSA-08A) is installed inside the processor unit. Use the following instructions for installation.

(1) Dismount the Main Logic PCB E47-700* disconnecting cables connected to the PCB.

(2) Unscrew the four 3 mm fixing screws on the corner of the Power PCB E47-600*. The four screws will be used for fixing the Gyro Interface chassis.

(3) Locate the position of the four fixing studs at the corner on the Power PCB prepared for the KSA-08A module. (Refer to the figure A.2)

(4) Put and fix the KSA-08A module chassis with E47-510A PCB on the studs using the four 3 mm fixing screws and connect cables to connector J708 on the backside of the Main Logic PCB. (Refer to the figure A.2)

(5) Fix the Main Logic PCB E47-700* at the position again.

(6) Reconnect the cables to the connectors J707 and J718 on the topside of the

Main Logic PCB. (Refer to the figure A.2)

(7) Reconnect all cables to the Main Logic PCB.

Cable connecting list

No.	KSA-08A (E47-510A)	Main Logic PCB (E47-700*)
1	J512	J708
2	J515	J707
3	J517/518	J718

GYRO connector pinouts and cable color coding designation:

Cable type name	Port name	Pin No.	Signal name	Color code
CW-388-5M	GYRO	1	S1	Red dot/Orange
		2	S2	Black dot/Orange
		3	S3	Red dot/Grey
		4	R1	Red dot/White
		5	R2	Black dot/White
		6	COM	Red dot/Yellow
		7	GND	Shield
		8	LOG1	Red dot/Pink
		9	LOG2	Black dot/Pink
		10	NC	

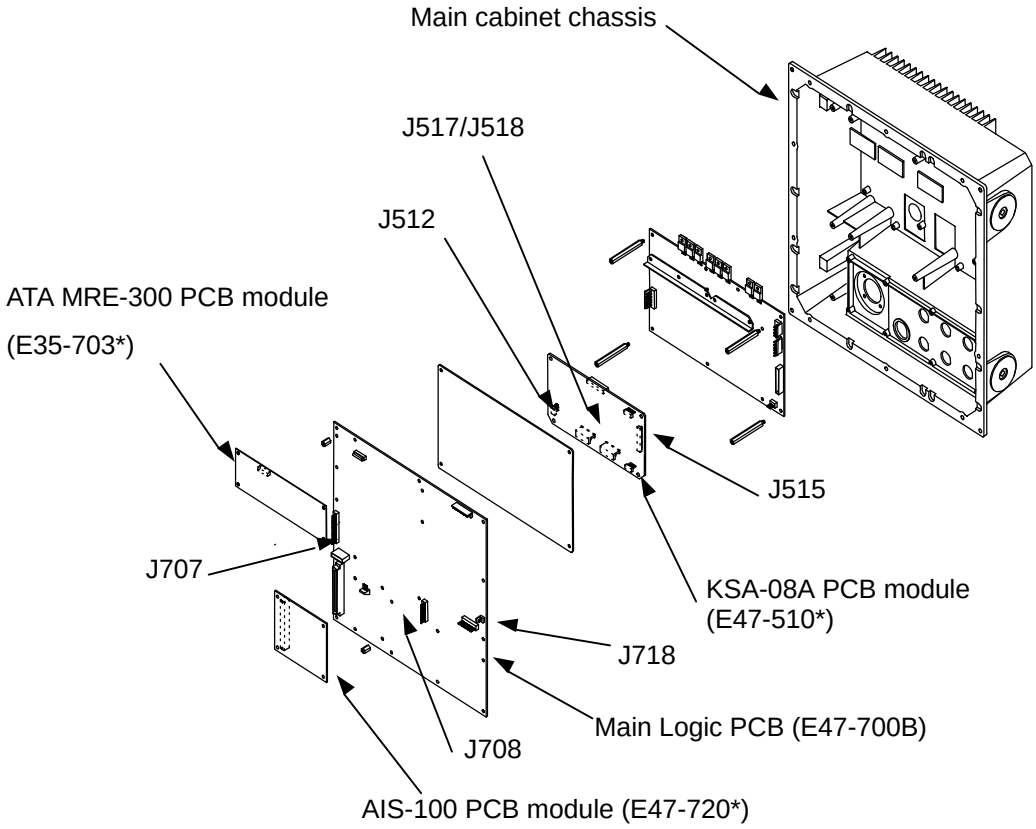

Figure A.2 Fitting ATA, AIS and Gyro Interface modules into Main Logic PCB

APPENDIX 2

Optional cables pinouts and cable color-coding designation

DATA connector pinouts and cable color coding designation:

Cable type name	Port name	Pin No.	Signal name	Color code
CW-376-5M	DATA	1	Shield	Shield, Blue
		2	OUT-A	White
		3	OUT-B	Red
		4	IN-A	Orange
		5	IN-B	Black
		6	GND	Green

REMOTE connector pinouts and cable color coding designation:

Cable type name	Port name	Pin No. A	Pin No. B	Signal name	Color code
CW-561-10M	REMOTE	1	7	VIDEO OUT	Coax. Black 1D(*)/White
		2	8	TRIG OUT	Coax. Black 2D(*)/White
		3	9	GND	Coax. Shield
		4	10	AZIP OUT	White
		5	11	SHF OUT	Yellow
		6	6	GND	Coax. Shield
		7	1	VIDEO IN	Coax. Black 3D(*)/White
		8	2	TRIG IN	Coax. Black 4D(*)/White
		9	3	GND	Coax. Shield
		10	4	AZIP IN	Green
		11	5	SHF IN	Blue
		12	12	+12V DC	NC

NOTE for (*):
1D – 4D: This notation indicates the number of dots printed on the cable jacket.